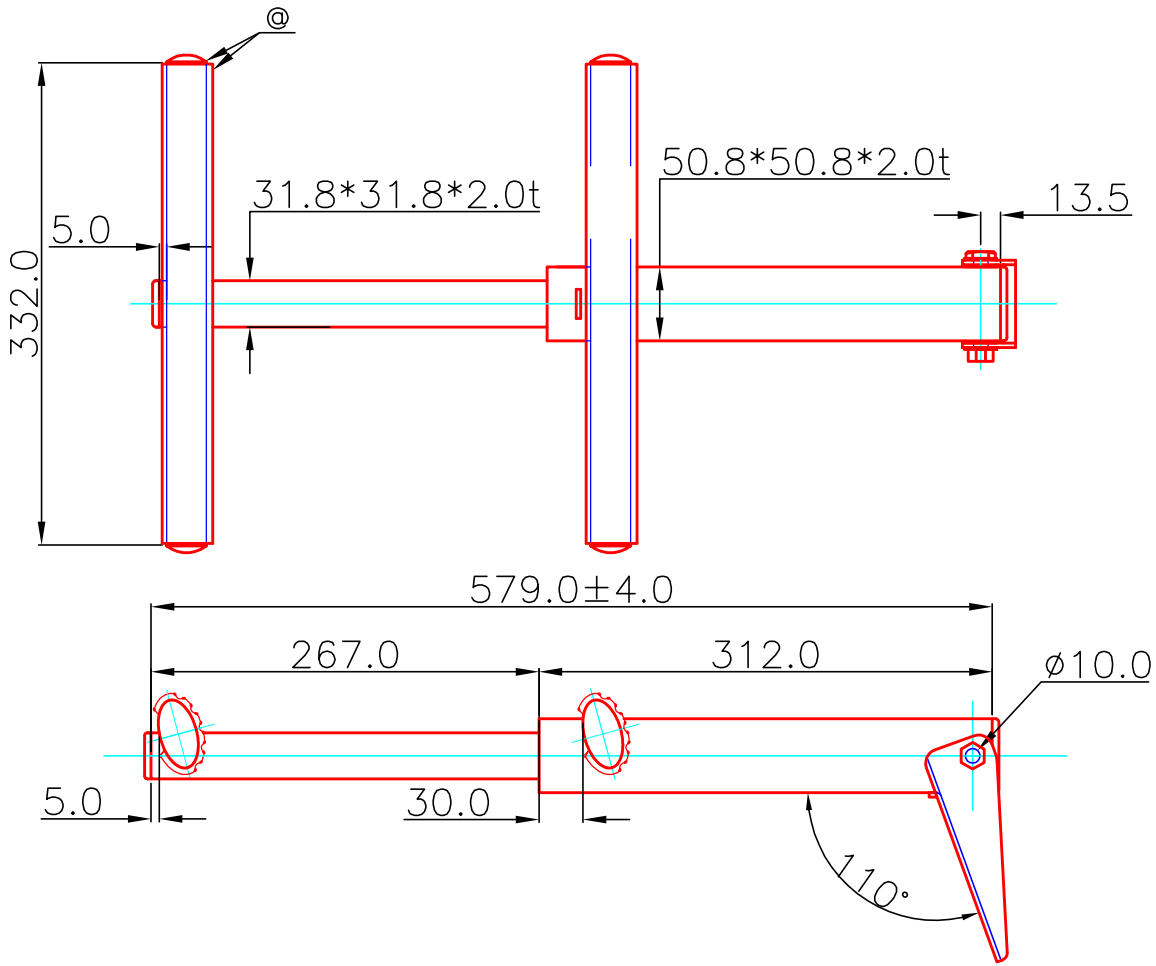

		Prepared By: Dive N Dog			
		TDL-2			
Drawn:	Date:				
Checked:	Date:	M'TL: SS304	Scale:	DWG. NO.:	Edition:
Approved:	Date:	Weight: g	Dimensions: M/M		
Projection:	A4H	Finish: Polished	SHEET OF	Customer's No.:	